1. General Description

A: SPECIFICATION

1. TORQUE CONVERTER CLUTCH

Model	Non-turbo	Turbo
Type	Symmetric, 3 element, single stage, 2 phase torque converter	
Stall torque ratio	2.05 — 2.35	
Standard diameter mm (in)	246 (9.69)	
Stall speed (at sea level) rpm	2,200 — 2,700	2,600 — 3,100
One-way clutch	Sprag type one-way clutch	

2. OIL PUMP

Type	Parachoid constant-displacement pump	
Driving method	Driven by engine	
Number of teeth	Inner rotor	9
	Outer rotor	10

3. TRANSMISSION CONTROL ELEMENT

Type	4-forward, 1-reverse double-row planetary gears
Multi-plate clutch	3 sets
Multi-plate brake	2 sets
One-way clutch (sprag type)	1 sets

4. TRANSMISSION GEAR RATIO

1st	2.785
2nd	1.545
3rd	1.000
4th	0.694
Rev	2.272

5. PLANETARY GEAR AND PLATE

Model	Non-turbo	Turbo
Number of front sun gear teeth	33	
Number of front pinion teeth	21	
Number of front internal gear teeth	75	
Number of rear sun gear teeth	42	
Number of rear pinion teeth	17	
Number of rear internal gear teeth	75	
Number of high clutch drive plates	4	5
Number of low clutch drive plates	5	7
Number of reverse clutch drive plates	2	
Number of drive plates for the 2-4 brake	3	4
Number of drive plates for low & reverse brake	5	7

6. SELECTOR POSITION

P (Park)	Transmission is in neutral, output member is immovable, engine start is possible
R (Reverse)	Transmission in reverse for backing up
N (Neutral)	Transmission is in neutral and engine start is possible
D (Drive)	Automatic gear change 1st ← → 2nd ←→ 3rd ← → 4th
3 (3rd)	Automatic gear change 1st ← → 2nd ←→ 3rd ← 4th
2 (2nd)	2nd gear will be locked (speed reduction is possible, 2nd ← 3rd ← 4th.)
1 (1st)	1st gear will be locked (speed reduction is possible, 1st ← 2nd ← 3rd ← 4th.)
Control method	Wire cable type

7. HYDRAULIC CONTROL AND LUBRICATION

Type		Electronic hydraulic control [4 forward gear changes made by electronic signals of vehicle speed and accelerator (throttle) opening]
Fluid	Recommended materials	SUBARU ATF
	Alternative	IDEMITSU: ATF Castrol: Transmax J
Fluid capacity ℓ (US qt, Imp qt)		9.3 — 9.6 (9.8 — 10.1, 8.2 — 8.4)
Lubrication system		Forced feed lubrication with oil pump
Oil		Automatic transmission fluid (see above)

8. COOLING AND HARNESS

Cooling system	Liquid-cooler incorporated in radiator
Inhibitor switch	12 poles
Transmission harness	20 poles

9. TRANSFER

Model	Non-turbo	Turbo
Transfer type	Multi-plate transfer (MP-T)	Variable torque distribution (VTD)
Number of transfer clutch drives and driven plates	5	3
Control method	Electronic hydraulic type	
Lubricant	Same automatic transmission fluid as used in the automatic transmission	
Reduction gear ratio	1.000 (53/53)	

10.FINAL REDUCTION GEAR

	Non-turbo	Turbo
Front final reduction gear ratio	4.111 (37/9)	3.900 (39/10)

11.RECOMMENDED GEAR OIL

Lubrication oil	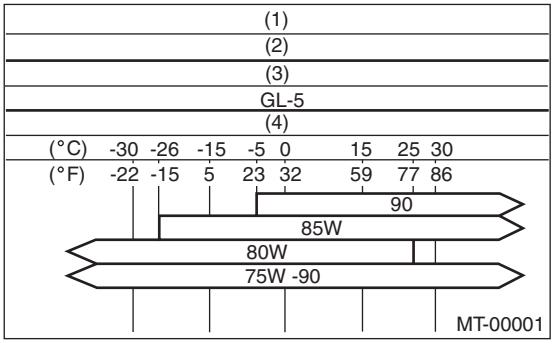 (1) Item (2) Front differential gear oil (3) API standard (4) SAE viscosity No. and applicable temperature
Front differential oil capacity ℓ (US qt, Imp qt)	1.1 — 1.3 (1.2 — 1.4, 1.0 — 1.1)

B: COMPONENT

1. TORQUE CONVERTER CLUTCH AND CASE

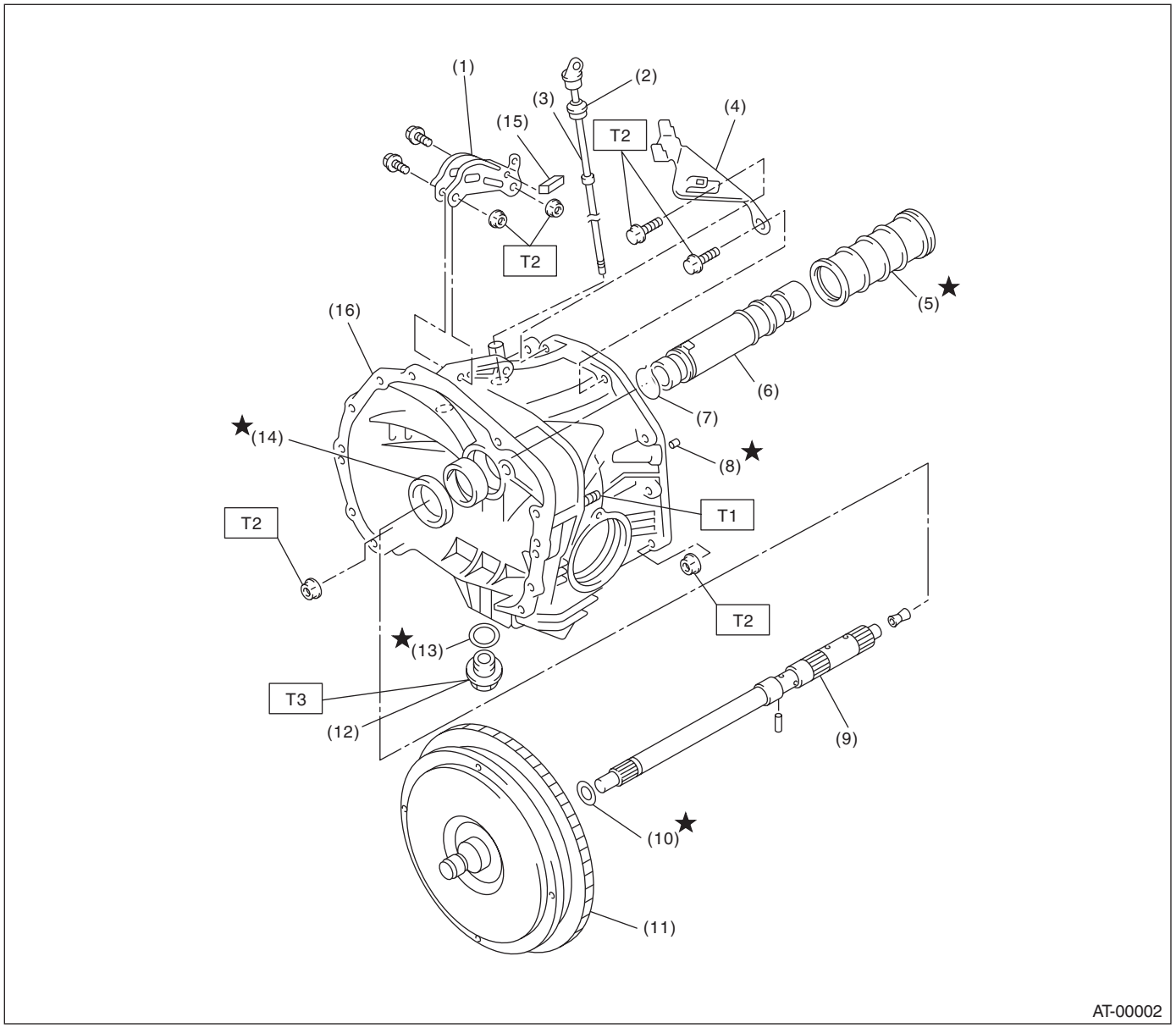

(1)	Pitching stopper bracket	(9)	Input shaft	(16)	Converter case
(2)	O-ring	(10)	O-ring		
(3)	Differential oil level gauge	(11)	Torque converter clutch ASSY	***Tightening torque:N·m (kgf-m, ft-lb)***	
(4)	Stay	(12)	Drain plug	***T1:***	***18 (1.8, 13.3)***
(5)	Seal pipe	(13)	Gasket	***T2:***	***41 (4.2, 30.2)***
(6)	Oil pump shaft	(14)	Oil seal	***T3:***	***44 (4.5, 32.5) (Aluminum gasket)***
(7)	Clip	(15)	Clip (turbo model)		***70 (7.1, 51.6) (Copper gasket)***
(8)	Rubber seal				

2. OIL PUMP

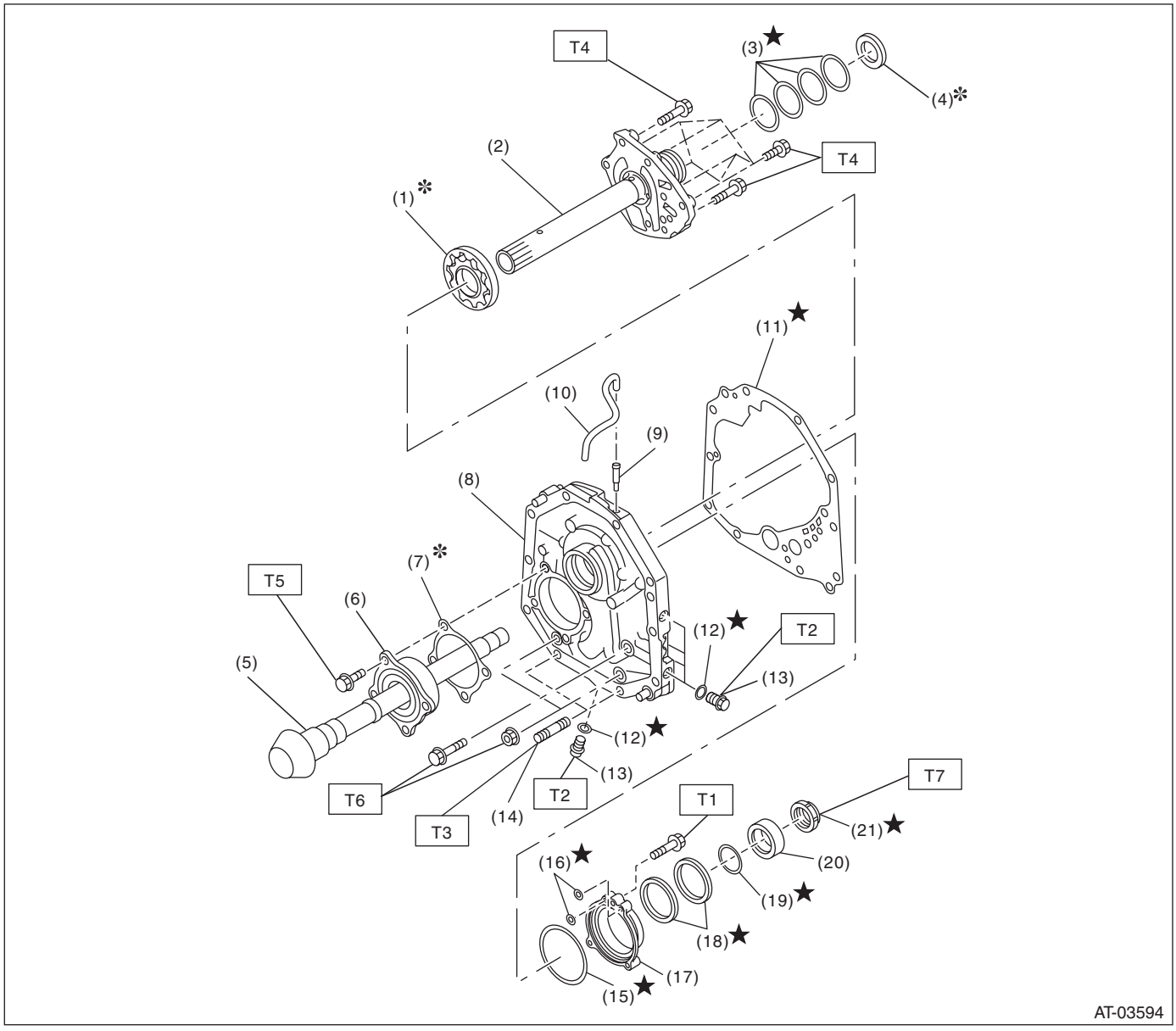

(1)	Oil pump rotor	(11)	Gasket	(21)	Lock nut
(2)	Oil pump cover	(12)	O-ring		
(3)	Seal ring	(13)	Test plug		
(4)	Thrust needle bearing	(14)	Stud bolt		
(5)	Drive pinion shaft	(15)	O-ring		
(6)	Roller bearing	(16)	O-ring		
(7)	Shim	(17)	Oil seal retainer		
(8)	Oil pump housing	(18)	Oil seal		
(9)	Nipple	(19)	O-ring		
(10)	Air breather hose	(20)	Drive pinion collar		

Tightening torque:N·m (kgf-m, ft-lb)	
T1:	***7 (0.7, 5.1)***
T2:	***13 (1.3, 9.6)***
T3:	***18 (1.8, 13.3)***
T4:	***25 (2.5, 18.4)***
T5:	***40 (4.1, 30)***
T6:	***42 (4.3, 31)***
T7:	***116 (11.8, 85)***

3. TRANSMISSION CASE AND CONTROL DEVICE

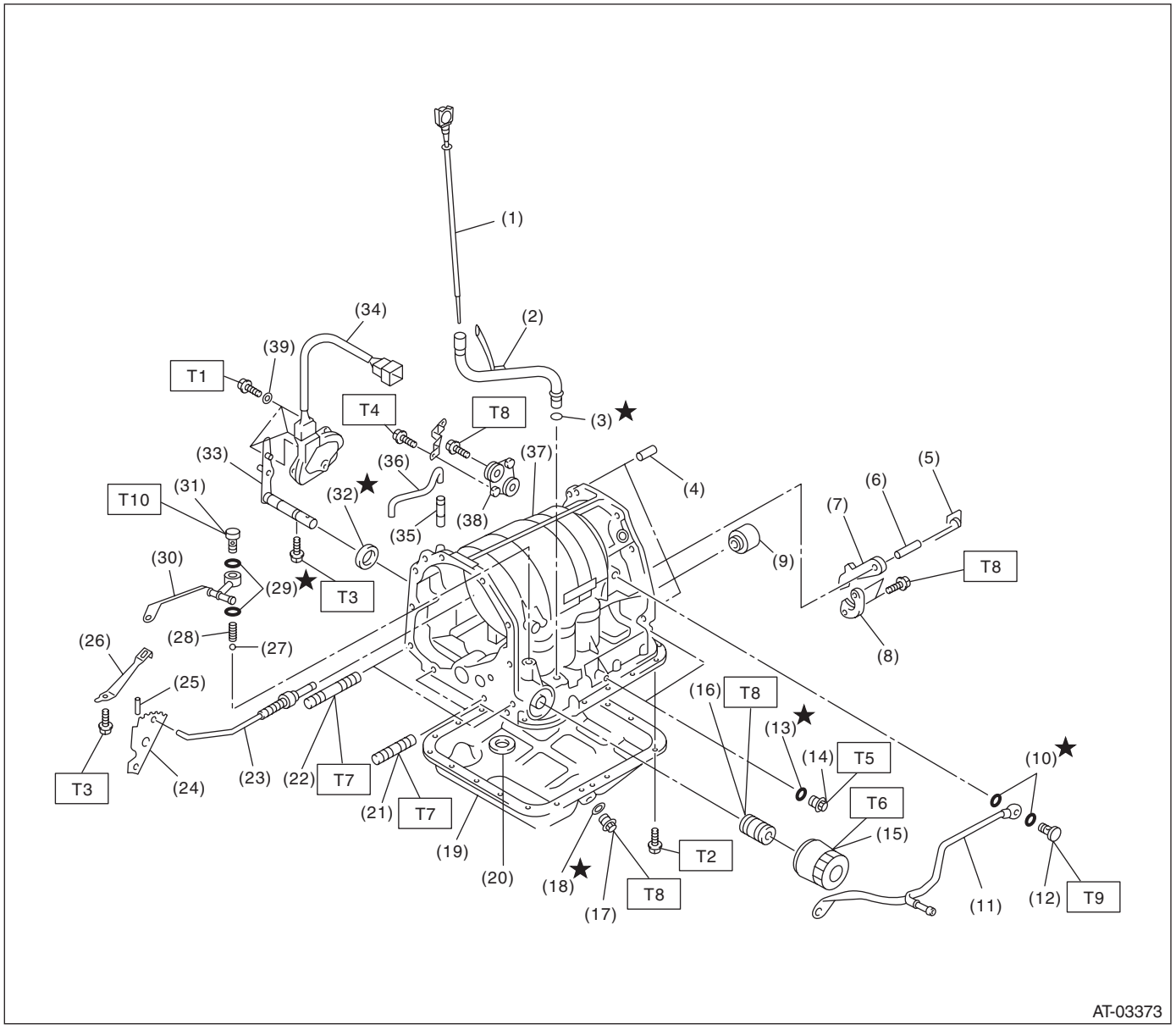

(1) ATF level gauge
(2) Oil charge pipe
(3) O-ring
(4) Straight pin
(5) Return spring
(6) Shaft
(7) Parking pawl
(8) Parking support
(9) Transfer clutch seal
(10) Gasket
(11) Inlet pipe
(12) Union screw
(13) O-ring
(14) Test plug
(15) Oil filter
(16) Oil filter stud bolt
(17) Drain plug
(18) Gasket
(19) Oil pan
(20) Magnet
(21) Stud bolt (short)
(22) Stud bolt (long)
(23) Parking rod
(24) Manual plate
(25) Spring pin
(26) Detent spring
(27) Ball
(28) Spring
(29) Gasket
(30) Outlet pipe
(31) Union screw
(32) Oil seal
(33) Range select lever
(34) Inhibitor switch ASSY
(35) Nipple
(36) Air breather hose
(37) Transmission case
(38) Plate ASSY
(39) Washer

Tightening torque:N·m (kgf-m, ft-lb)	
T1:	***3.4 (0.35, 2.5)***
T2:	***5 (0.5, 3.6)***
T3:	***6 (0.6, 4.3)***
T4:	***12 (1.2, 9)***
T5:	***13 (1.3, 9.6)***
T6:	***14 (1.4, 10)***
T7:	***18 (1.8, 13.3)***
T8:	***25 (2.5, 18.4)***
T9:	***40 (4.1, 30)***
T10:	***45 (4.6, 33)***

4. CONTROL VALVE AND HARNESS ROUTING

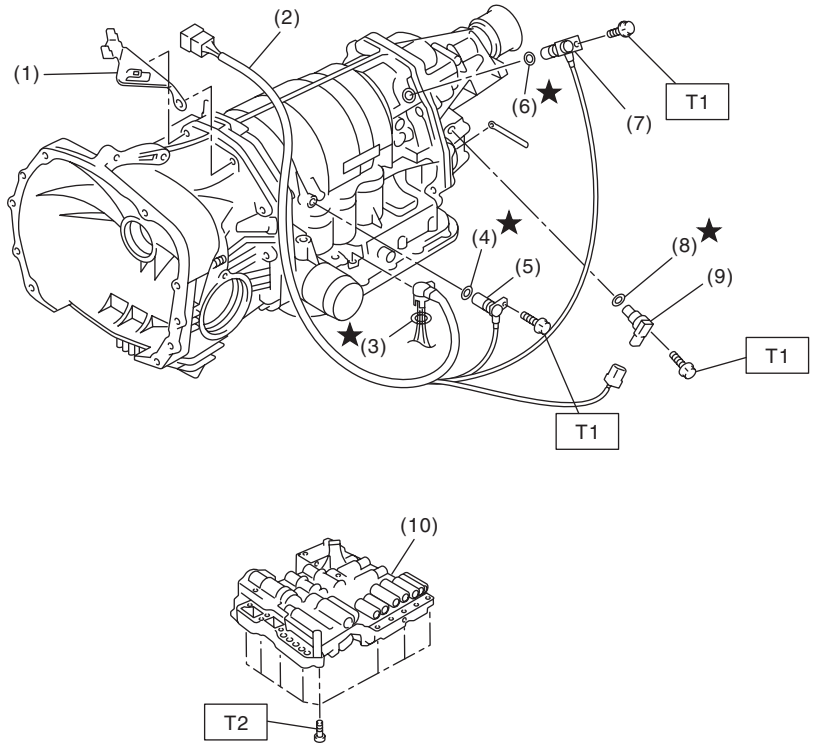

(1)	Stay	(6)	O-ring
(2)	Transmission harness	(7)	Front vehicle speed sensor
(3)	O-ring	(8)	O-ring
(4)	O-ring	(9)	Rear vehicle speed sensor
(5)	Torque converter turbine speed sensor	(10)	Control valve ASSY

Tightening torque:N·m (kgf-m, ft-lb)
T1: 7 (0.7, 5.1)
T2: 8 (0.8, 5.8)

5. HIGH CLUTCH AND REVERSE CLUTCH

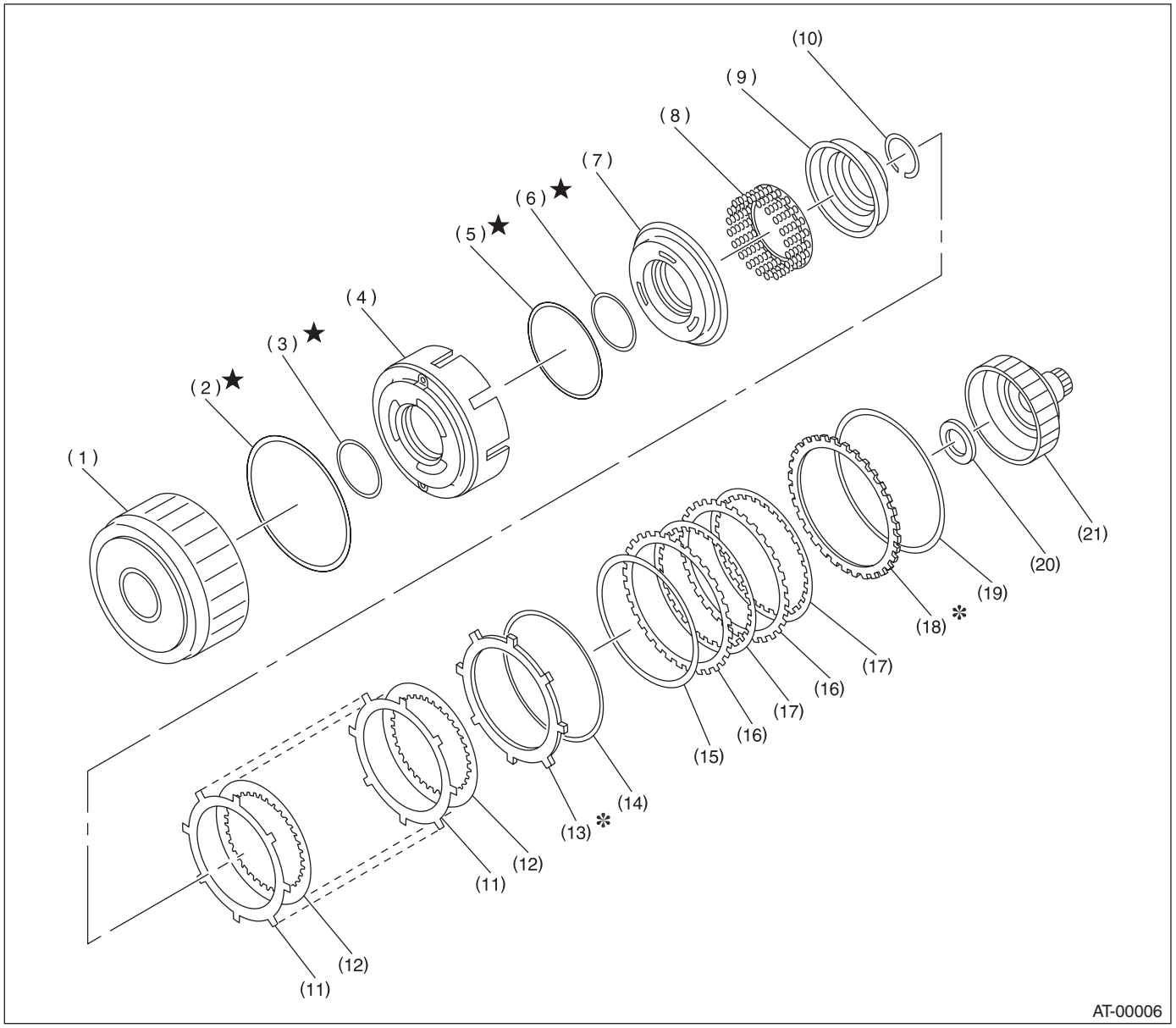

(1)	High clutch drum	(8)	Spring retainer	(15)	Dish plate
(2)	Lip seal	(9)	Cover	(16)	Driven plate (reverse clutch)
(3)	D-ring	(10)	Snap ring	(17)	Drive plate (reverse clutch)
(4)	Reverse clutch piston	(11)	Driven plate (high clutch)	(18)	Retaining plate (reverse clutch)
(5)	D-ring	(12)	Drive plate (high clutch)	(19)	Snap ring
(6)	D-ring	(13)	Retaining plate (high clutch)	(20)	Thrust needle bearing
(7)	High clutch piston	(14)	Snap ring	(21)	High clutch hub

6. PLANETARY GEAR AND 2-4 BRAKE

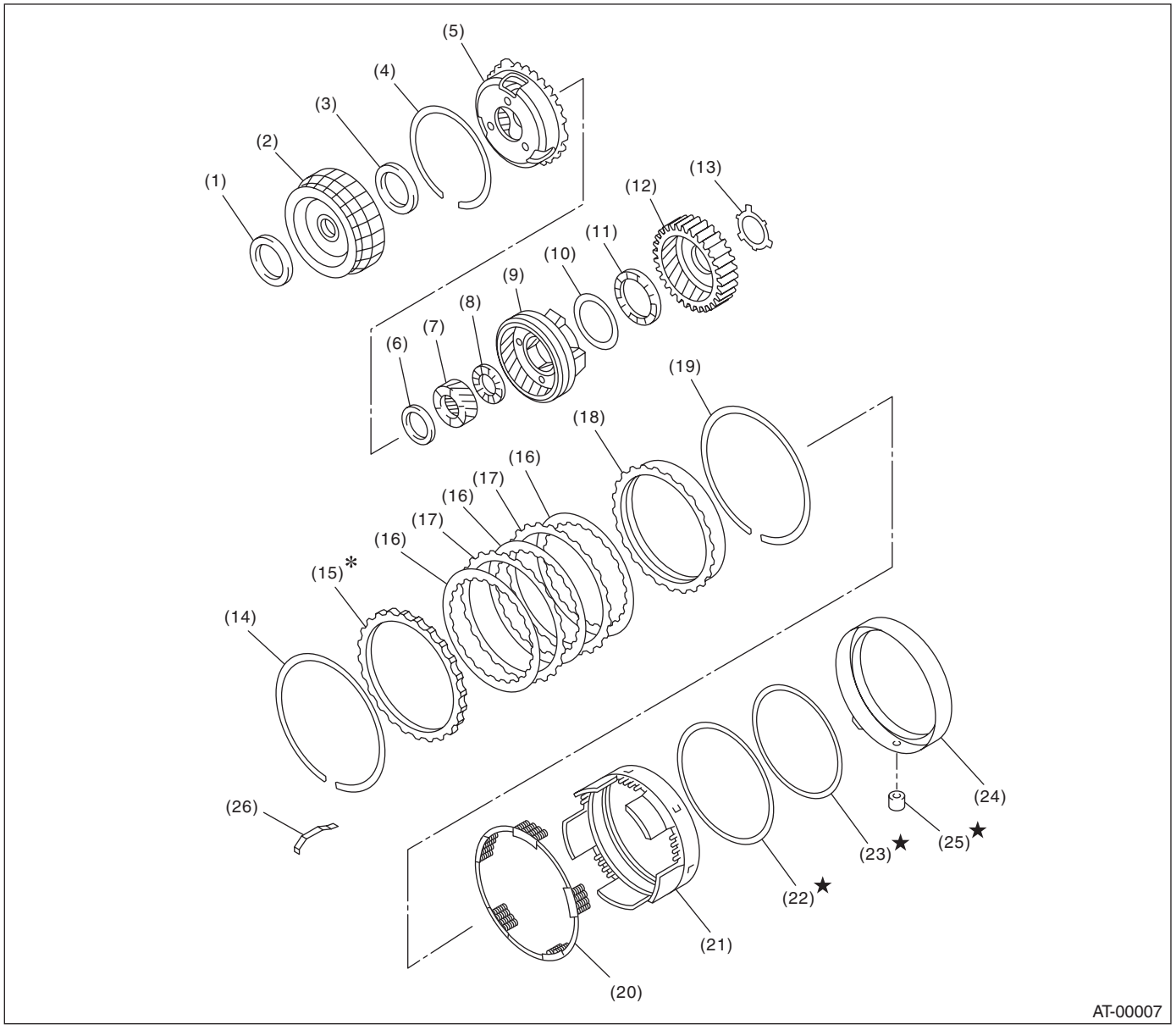

(1)	Thrust needle bearing	(10)	Washer	(19)	Snap ring
(2)	Front sun gear	(11)	Thrust needle bearing	(20)	Spring retainer
(3)	Thrust needle bearing	(12)	Rear internal gear	(21)	2-4 brake piston
(4)	Snap ring	(13)	Washer	(22)	D-ring
(5)	Front planetary carrier	(14)	Snap ring	(23)	D-ring
(6)	Thrust needle bearing	(15)	Retaining plate	(24)	2-4 brake piston retainer
(7)	Rear sun gear	(16)	Drive plate	(25)	2-4 brake seal
(8)	Thrust needle bearing	(17)	Driven plate	(26)	Leaf spring
(9)	Rear planetary carrier	(18)	Pressure rear plate		

7. LOW CLUTCH AND LOW & REVERSE BRAKE

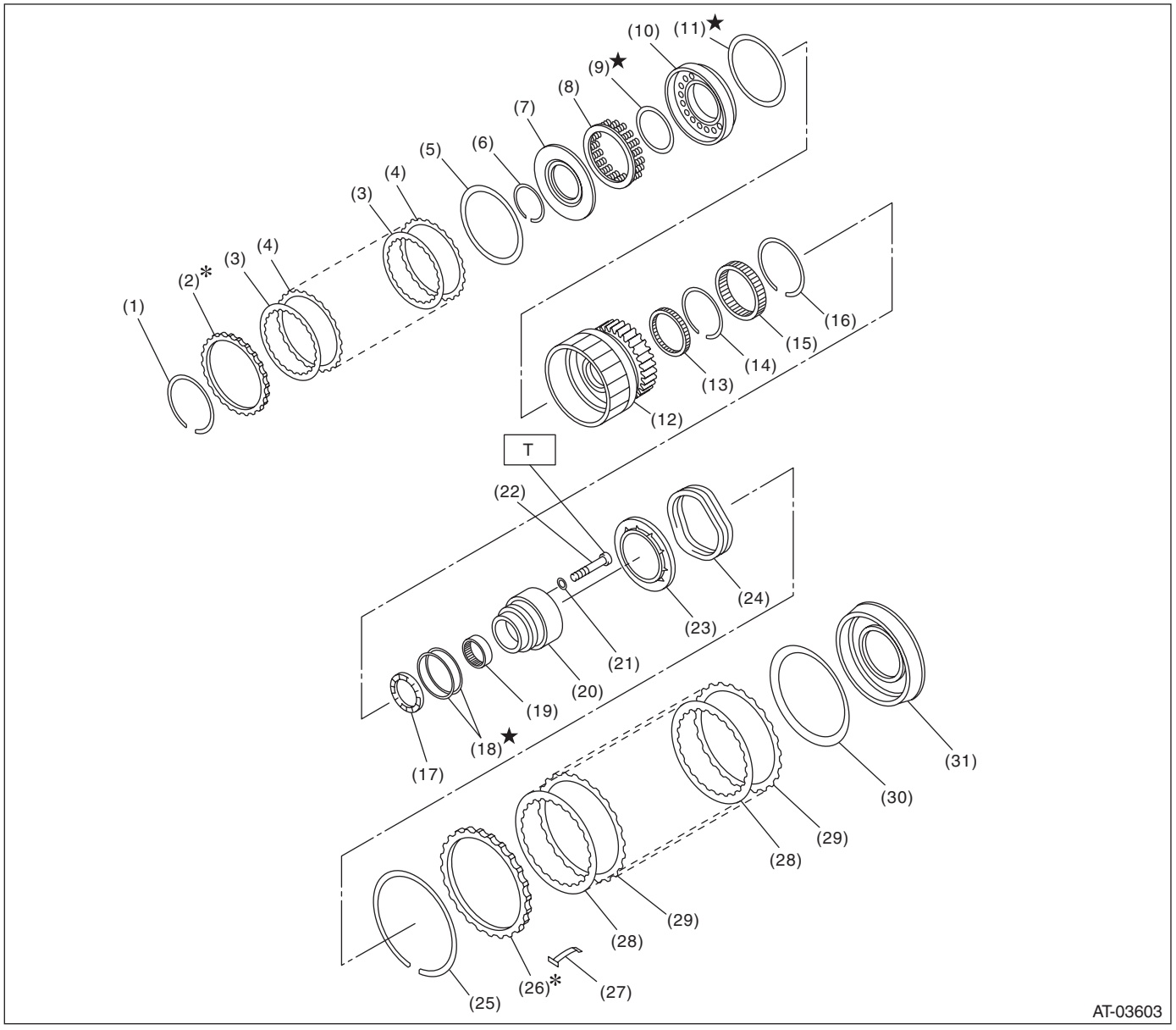

(1)	Snap ring	(13)	Needle bearing	(24)	Return spring
(2)	Retaining plate	(14)	Snap ring	(25)	Snap ring
(3)	Drive plate	(15)	One-way clutch	(26)	Retaining plate
(4)	Driven plate	(16)	Snap ring	(27)	Leaf spring
(5)	Dish plate	(17)	Thrust needle bearing	(28)	Drive plate
(6)	Snap ring	(18)	Seal ring	(29)	Driven plate
(7)	Cover	(19)	Needle bearing	(30)	Dish plate
(8)	Spring retainer	(20)	One-way clutch inner race	(31)	Low & reverse brake piston
(9)	D-ring	(21)	Washer		
(10)	Low clutch piston	(22)	Socket bolt		
(11)	D-ring	(23)	Spring retainer		
(12)	Low clutch drum				

Tightening torque:N·m (kgf-m, ft-lb)
T: 25 (2.5, 18.4)

8. REDUCTION GEAR (MP-T MODEL)

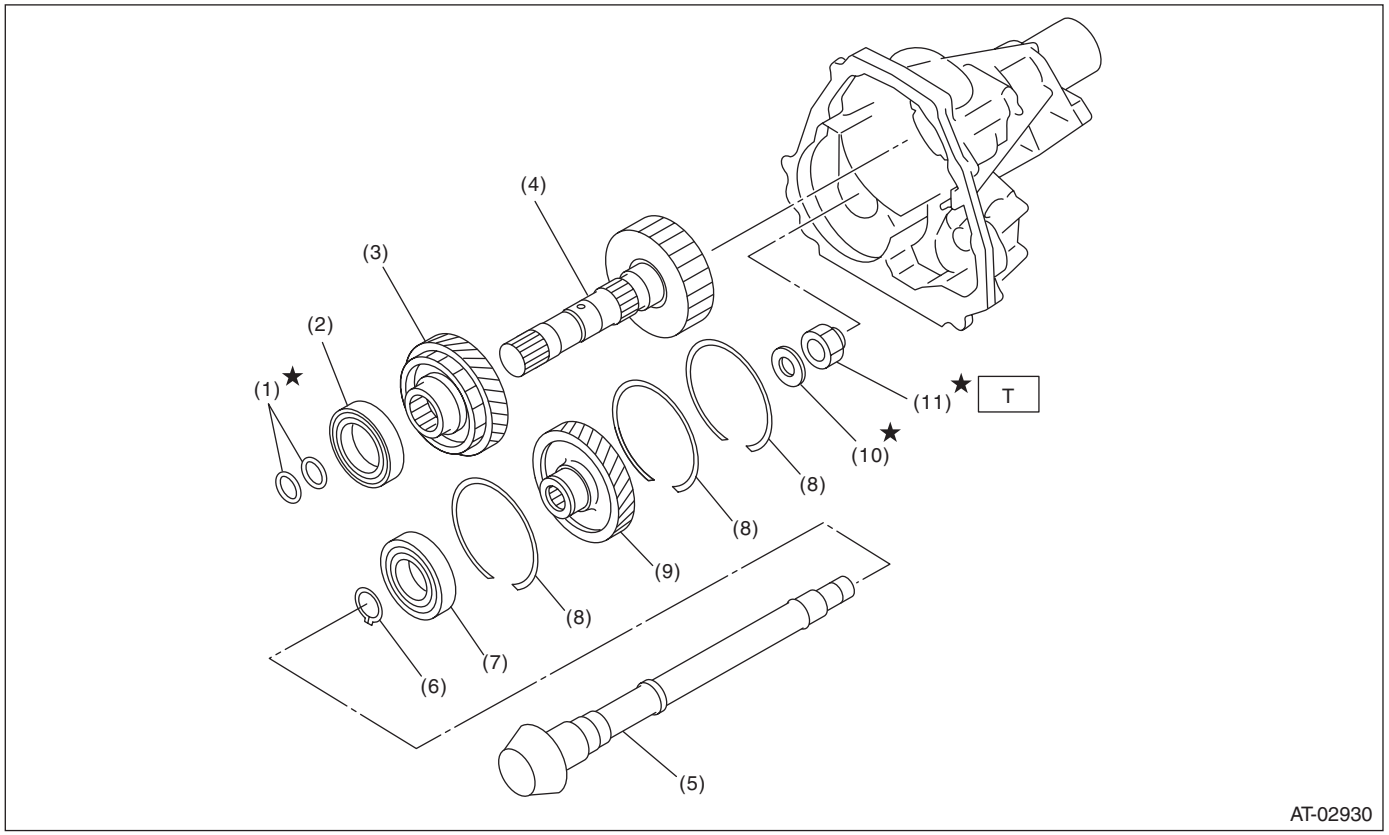

(1)	Seal ring	(6)	Snap ring	(11)	Lock nut
(2)	Ball bearing	(7)	Ball bearing		
(3)	Reduction drive gear	(8)	Snap ring		
(4)	Reduction drive shaft	(9)	Reduction driven gear		
(5)	Drive pinion shaft	(10)	Washer		

Tightening torque:N·m (kgf-m, ft-lb)
T: 100 (10.2, 73.8)

9. REDUCTION GEAR (VTD MODEL)

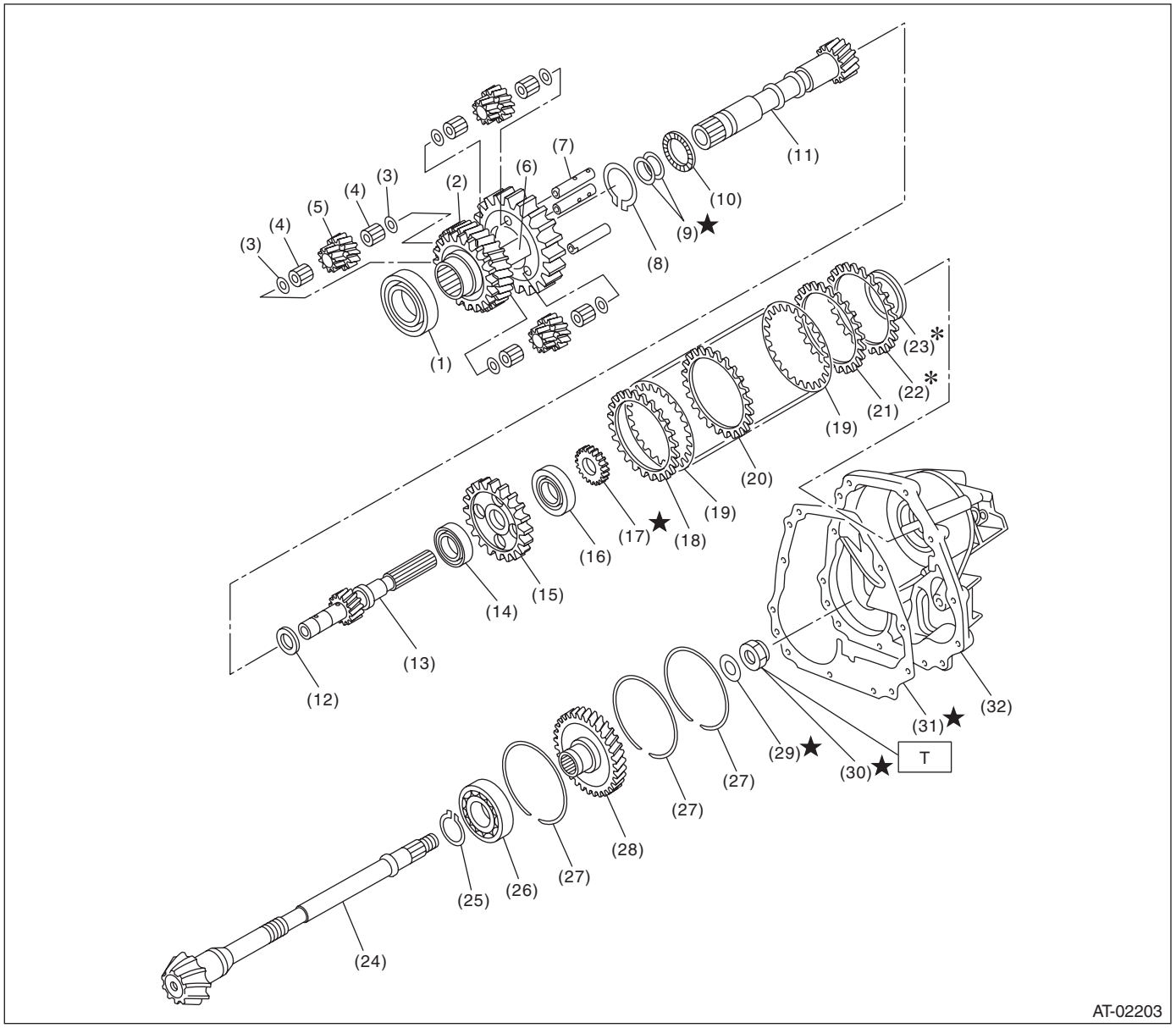

(1)	Ball bearing	(13)	Rear drive shaft	(25)	Snap ring
(2)	Reduction drive gear	(14)	Ball bearing	(26)	Ball bearing
(3)	Washer	(15)	Multi-plate clutch hub	(27)	Snap ring
(4)	Needle bearing	(16)	Ball bearing	(28)	Reduction driven gear
(5)	Pinion gear	(17)	Revolution gear	(29)	Lock washer
(6)	Carrier	(18)	Driven plate (Thick)	(30)	Lock nut
(7)	Planetary pinion shaft	(19)	Drive plate	(31)	Gasket
(8)	Snap ring	(20)	Driven plate (Thin)	(32)	Extension case
(9)	Seal ring	(21)	Driven plate (Thick)		
(10)	Thrust needle bearing	(22)	Retaining plate		
(11)	Intermediate shaft	(23)	Rear drive shaft shim		
(12)	Thrust washer	(24)	Drive pinion shaft		

Tightening torque:N·m (kgf-m, ft-lb)
T: 100 (10.2, 73.8)

10.DIFFERENTIAL GEAR

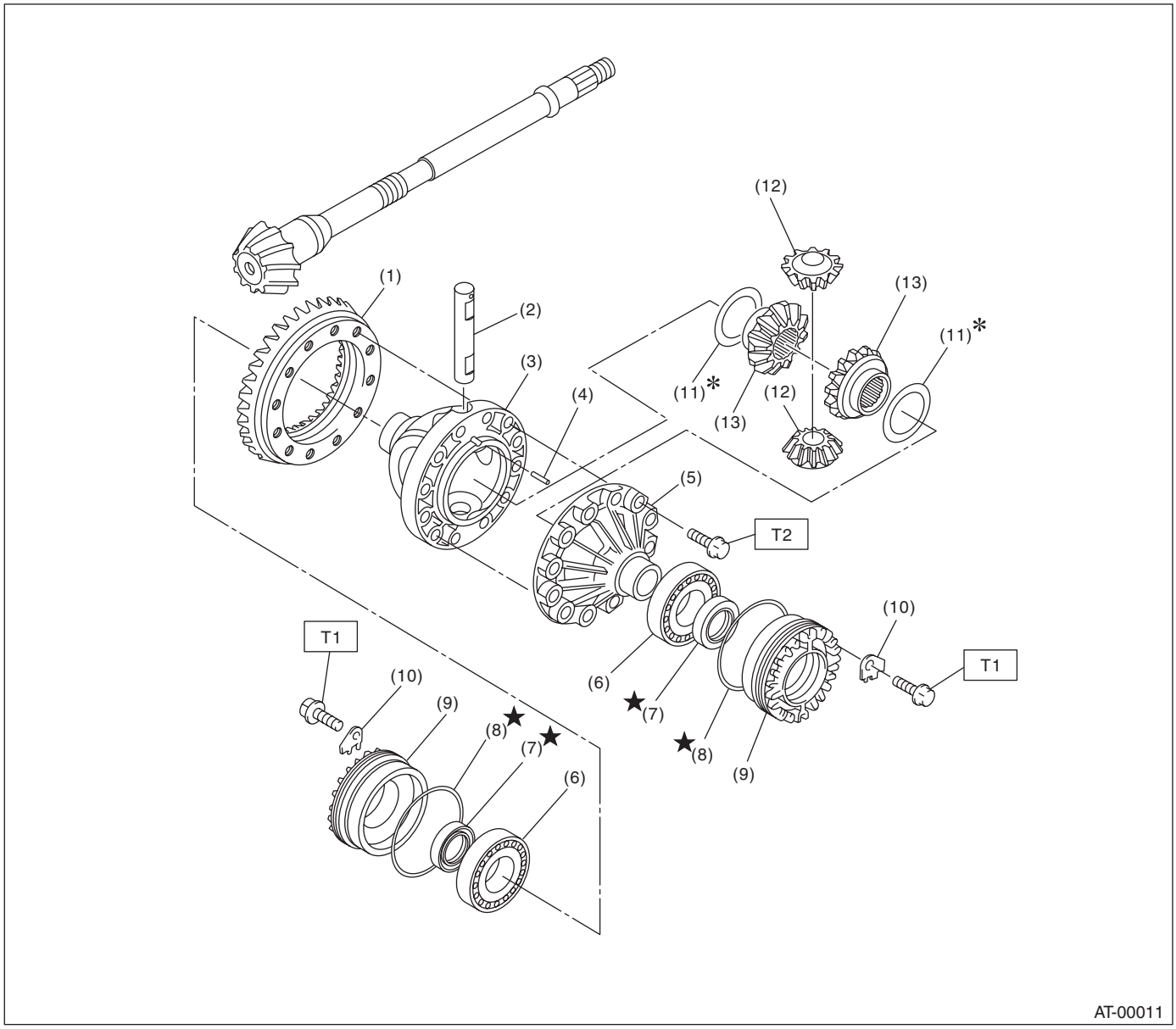

(1)	Hypoid driven gear	(7)	Oil seal	(13)	Differential bevel gear
(2)	Pinion shaft	(8)	O-ring		
(3)	Differential case (RH)	(9)	Differential side retainer	***Tightening torque:N·m (kgf-m, ft-lb)***	
(4)	Straight pin	(10)	Lock plate	***T1:***	***25 (2.5, 18.4)***
(5)	Differential case (LH)	(11)	Washer	***T2:***	***62 (6.3, 45.7)***
(6)	Taper roller bearing	(12)	Differential bevel pinion		

11.TRANSFER & EXTENSION CASE (MP-T MODEL)

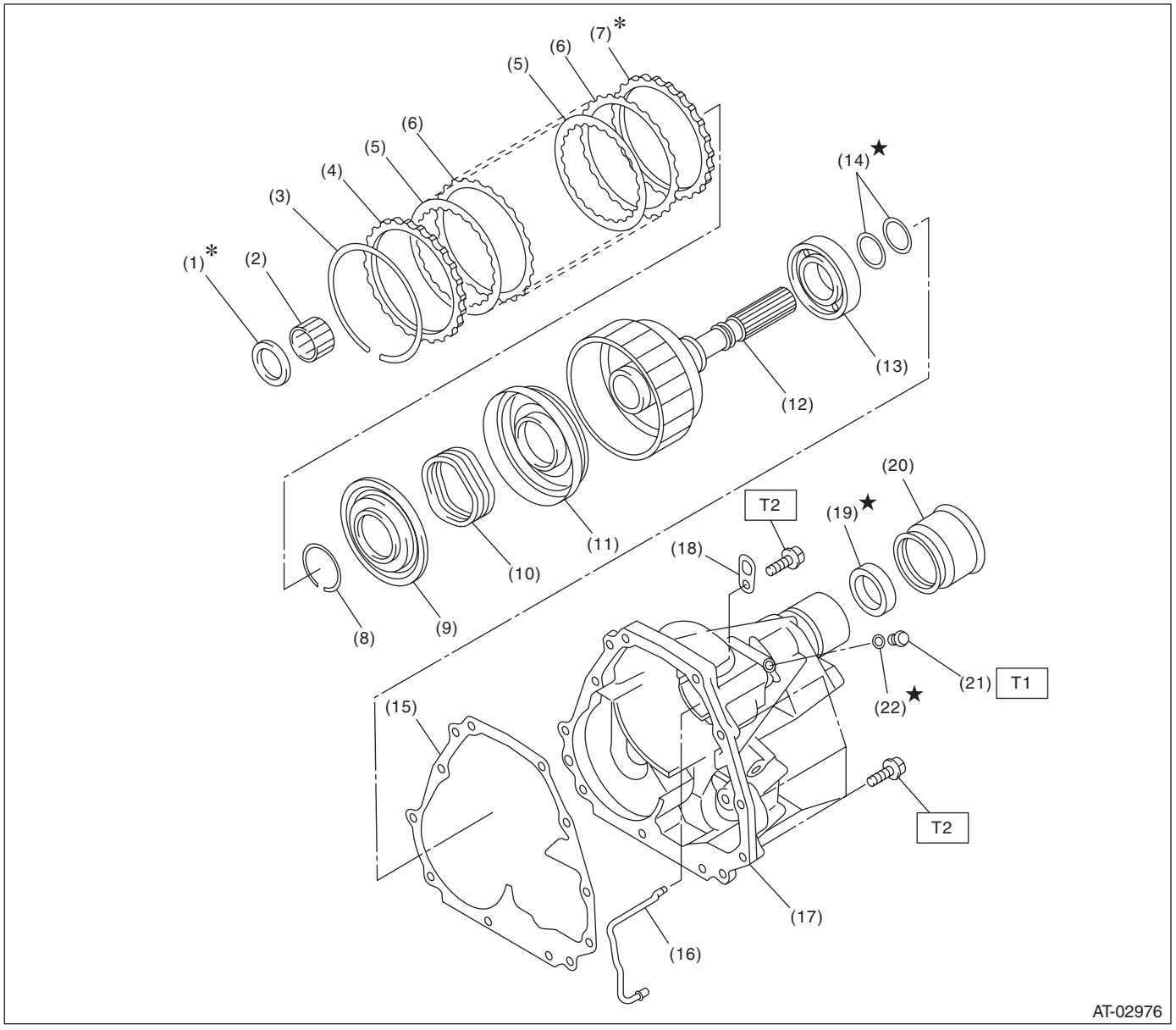

(1)	Thrust needle bearing	(10)	Return spring	(19)	Oil seal
(2)	Needle bearing	(11)	Transfer clutch piston	(20)	Dust cover
(3)	Snap ring	(12)	Rear drive shaft	(21)	Test plug
(4)	Driven plate (Thick)	(13)	Ball bearing	(22)	O-ring
(5)	Drive plate	(14)	Seal ring		
(6)	Driven plate (Thin)	(15)	Gasket		
(7)	Retaining plate	(16)	Transfer clutch pipe		
(8)	Snap ring	(17)	Extension case		
(9)	Transfer clutch piston seal	(18)	Transmission hanger		

Tightening torque:N·m (kgf-m, ft-lb)
T1: 13 (1.3, 9.6)
T2: 25 (2.5, 18.4)

12.TRANSFER & EXTENSION CASE (VTD MODEL)

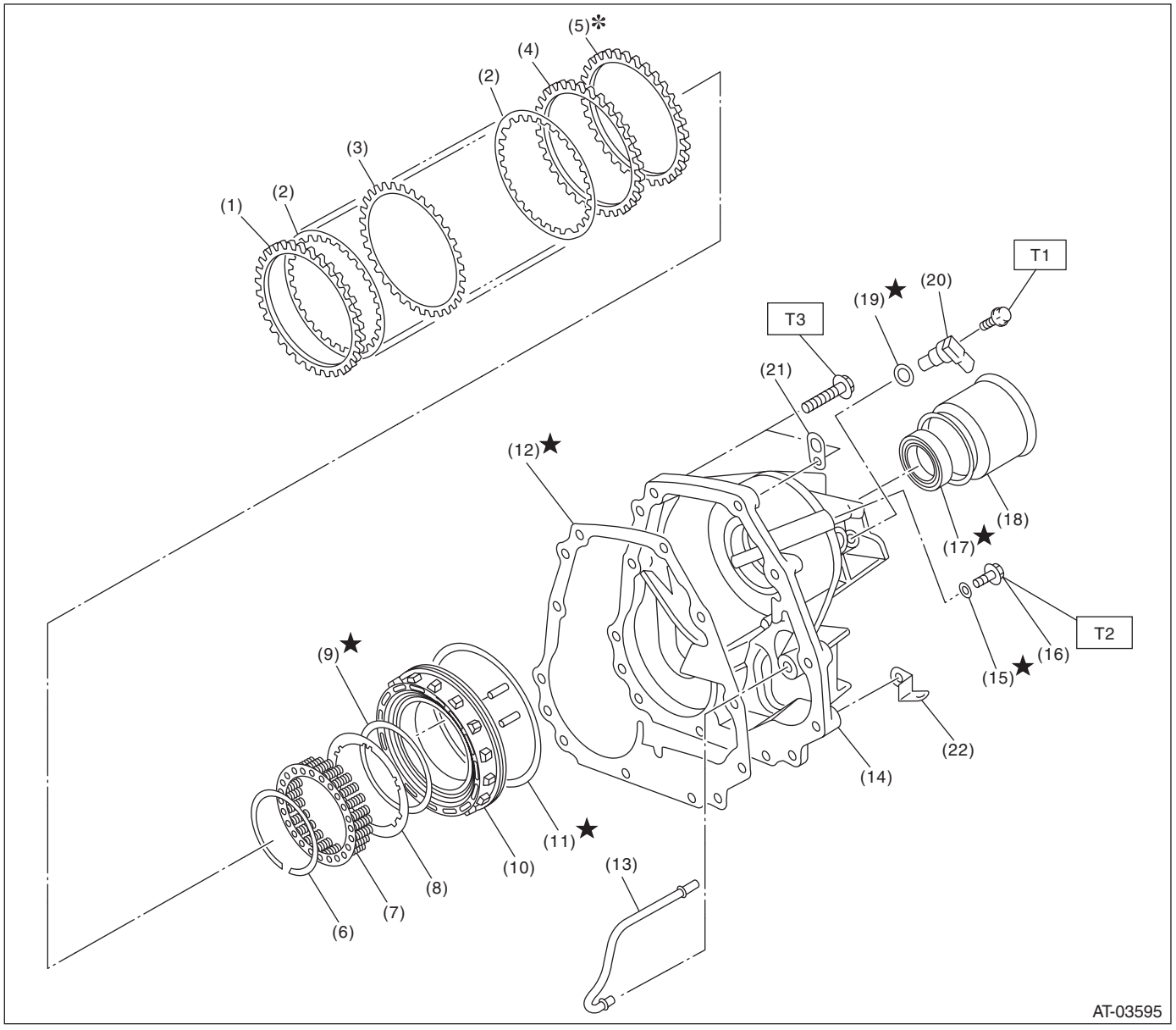

(1)	Driven plate (Thick)	(10)	Multi plate clutch piston ASSY	(19)	O-ring
(2)	Drive plate	(11)	D-ring	(20)	Rear vehicle speed sensor
(3)	Driven plate (Thin)	(12)	Gasket	(21)	Transmission hanger
(4)	Driven plate (Thick)	(13)	Multiplate clutch pipe	(22)	Harness bracket
(5)	Retaining plate	(14)	Extension case		
(6)	Snap ring	(15)	O-ring		
(7)	Spring retainer	(16)	Test plug		
(8)	Plate	(17)	Oil seal		
(9)	O-ring	(18)	Dust cover		

Tightening torque:N·m (kgf-m, ft-lb)

T1: 7 (0.7, 5.1)
T2: 13 (1.3, 9.6)
T3: 25 (2.5, 18.4)

13.TRANSMISSION MOUNTING

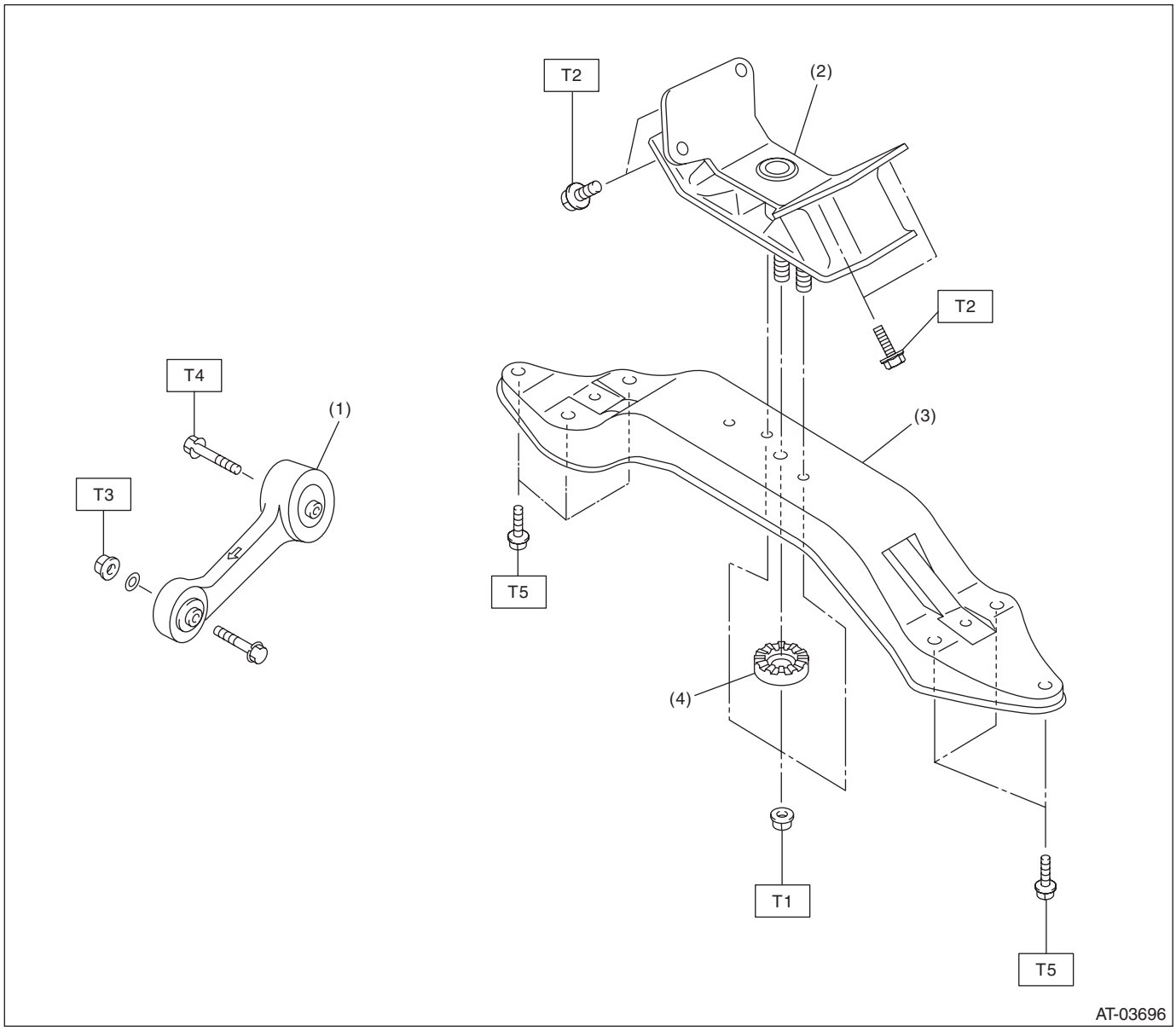

(1) Pitching stopper
(2) Rear cushion rubber
(3) Transmission rear crossmember
(4) Stopper

Tightening torque:N·m (kgf-m, ft-lb)

T1: 35 (3.6, 26)
T2: 39 (4.0, 29)
T3: 50 (5.1, 36.9)
T4: 58 (5.9, 43)
T5: 70 (7.1, 51.6)

C: CAUTION

- Wear appropriate work clothing, including a cap, protective goggles and protective shoes when performing any work.
- Remove contamination including dirt and corrosion before removal, installation or disassembly.
- Keep the disassembled parts in order and protect them from dust and dirt.
- Do not place the oil pan with its inner side facing up until it is installed, to prevent intrusion of foreign matter into the valve body.
- Before removal, installation or disassembly, be sure to clarify the failure. Avoid unnecessary removal, installation, disassembly and replacement.
- When disassembling the case and other light alloy parts, use a plastic hammer to force it apart. Do not pry apart with screwdrivers or other tools.
- Vehicle components are extremely hot after driving. Be wary of receiving burns from heated parts.
- Use SUBARU genuine gear oil, grease etc. or equivalent. Do not mix fluid, grease, etc. of different grades or manufacturers.
- Be sure to tighten fasteners including bolts and nuts to the specified torque.
- Place lifts, shop jacks or rigid racks at the specified points.
- Before installation, apply ATF or gear oil onto sliding or revolving surfaces to meet the application of the part.
- Replace deformed or damaged snap rings with new parts.
- Before installing O-rings or oil seals, apply sufficient amount of ATF fluid to avoid damage and deformation.
- Be careful not to incorrectly install or fail to install O-rings, snap rings and other such parts.
- Before securing a part on a vise, place cushioning material such as wood blocks, aluminum plate, or cloth between the part and the vise.
- Avoid damaging the mating surface of the case.
- Before applying liquid gasket, completely remove the old seal.
- When disassembling the AT, be sure to use nylon gloves and paper towels. Do not use cloth gloves or waste cloth.

D: PREPARATION TOOL

1. SPECIAL TOOL

ILLUSTRATION	TOOL NUMBER	DESCRIPTION	REMARKS
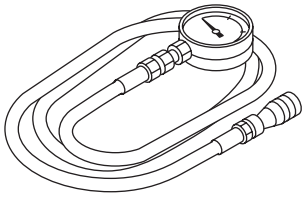 ST-498575400	498575400	OIL PRESSURE GAUGE ASSY	Used for measuring oil pressure.
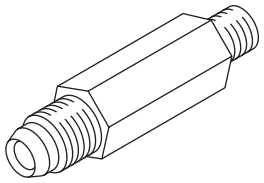 ST-498897200	498897200	OIL PRESSURE GAUGE ADAPTER	Used at the oil pump housing when measuring reverse clutch pressure and line pressure.
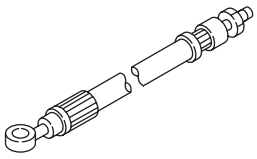 ST-498897700	498897700	OIL PRESSURE ADAPTER SET	Used for measuring transfer clutch pressure.
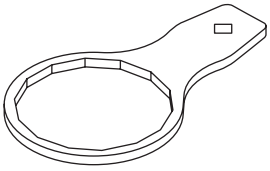 ST-498545400	498545400	OIL FILTER WRENCH	Used for removing and installing the ATF filter.

ILLUSTRATION	TOOL NUMBER	DESCRIPTION	REMARKS
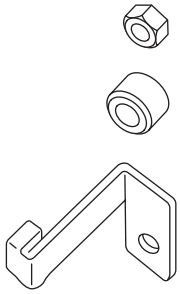 ST-498277200	498277200	STOPPER SET	Used for removing and installing automatic transmission assembly to engine.
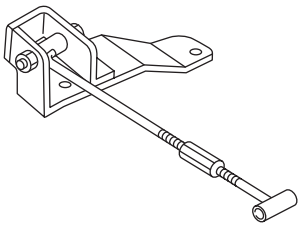 ST41099AC000	41099AC000	ENGINE SUPPORT ASSY	Used for supporting the engine.
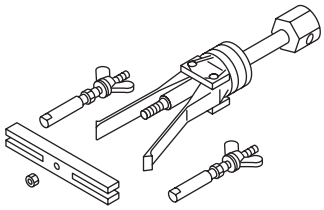 ST-398527700	398527700	PULLER ASSY	• Used for removing the extension case roller bearing. • Used for removing the extension oil seal. • Used for removing the front differential side retainer bearing outer race. • Used for removing the front differential side retainer oil seal.
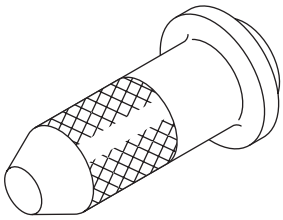 ST-498057300	498057300	INSTALLER	Used for installing the extension oil seal.
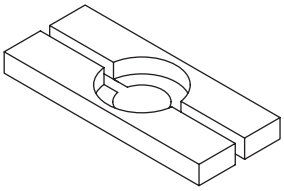 ST-498077000	498077000	REMOVER	Used for removing the differential taper roller bearing.

ILLUSTRATION	TOOL NUMBER	DESCRIPTION	REMARKS
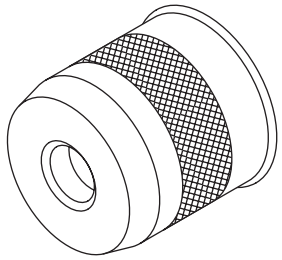 ST-499247400	499247400	INSTALLER	• Used for installing the transfer outer snap ring. • Used together with the SNAP RING OUTER GUIDE (499257300).
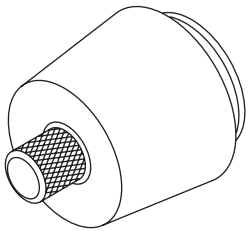 ST-499257300	499257300	SNAP RING OUTER GUIDE	• Used for installing the transfer outer snap ring. • Used together with the INSTALLER (499247400).
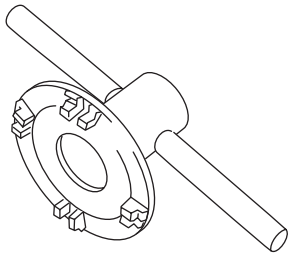 ST18630AA010	18630AA010	WRENCH COMPL RETAINER	• Used for removing and installing the differential side retainer. • WRENCH ASSEMBLY (499787000) can also be used.
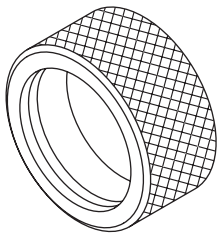 ST-398437700	398437700	DRIFT	• Used for installing the converter case oil seal. • Used for installing the front differential taper roller bearing.
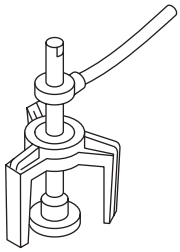 ST-398673600	398673600	COMPRESSOR	Used for removing and installing the clutch spring.

ILLUSTRATION	TOOL NUMBER	DESCRIPTION	REMARKS
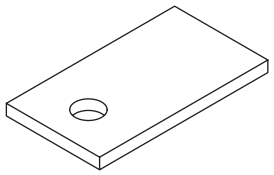 ST-498255400	498255400	PLATE	Used for measuring the backlash of hypoid gear.
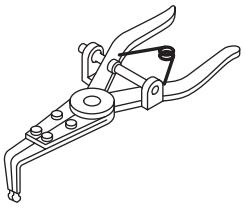 ST-399893600	399893600	PLIER	Used for removing and installing the clutch spring.
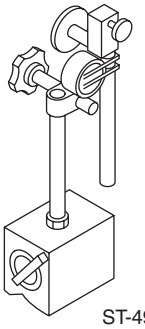 ST-498247001	498247001	MAGNET BASE	• Used for measuring the gear backlash. • Used together with the DIAL GAUGE (498247100).
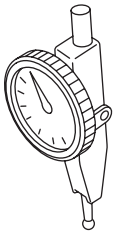 ST-498247100	498247100	DIAL GAUGE	• Used for measuring the gear backlash. • Used together with the MAGNET BASE (498247001).
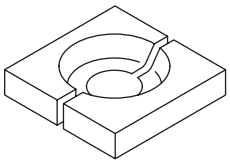 ST-498517000	498517000	REPLACER	Used for removing the front roller bearing.

ILLUSTRATION	TOOL NUMBER	DESCRIPTION	REMARKS
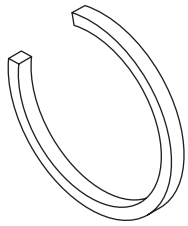 ST-398623600	398623600	SEAT	Used for removing the spring of the transfer clutch piston.
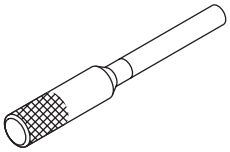 ST-499267300	499267300	STOPPER PIN	Used for installing the inhibitor switch.
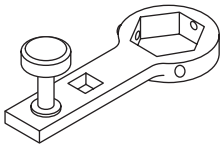 ST-499787700	499787700	WRENCH	Used for removing and installing the drive pinion lock nut.
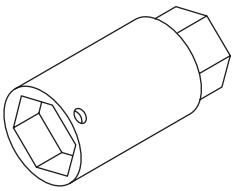 ST-499787500	499787500	ADAPTER	Used for removing and installing the drive pinion lock nut.
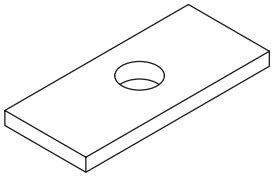 ST-398643600	398643600	GAUGE	Used for measuring the total end play, extension end play and drive pinion height.

ILLUSTRATION	TOOL NUMBER	DESCRIPTION	REMARKS
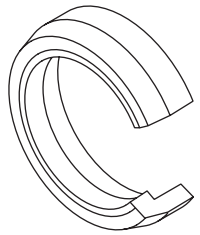 ST-498627100	498627100	SEAT	Used for holding the low clutch piston retainer spring when installing snap ring.
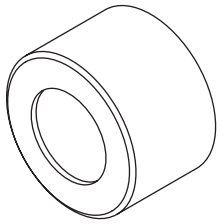 ST-499577000	499577000	GAUGE	• Used for measuring the mating surface of the transmission to the end face of the reduction gear. • For MP-T models
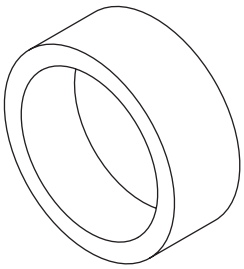 ST-398744300	398744300	GAUGE	• Used for measuring the mating surface of the transmission to the end face of the multiplate clutch. • For VTD models
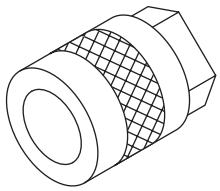 ST-499737000	499737000	PULLER	Used for removing the reduction driven gear assembly.
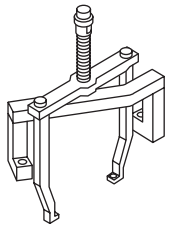 ST-499737100	499737100	PULLER SET	Used for removing the reduction drive gear assembly.

ILLUSTRATION	TOOL NUMBER	DESCRIPTION	REMARKS
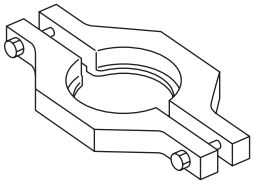 ST-498077600	498077600	REMOVER	Used for removing the ball bearing.
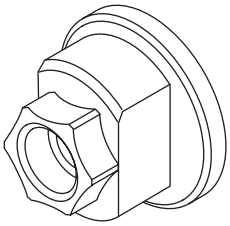 ST-498937110	498937110	HOLDER	Used for removing and installing the drive pinion lock nut.
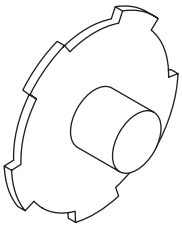 ST-498677100	498677100	COMPRESSOR	Used for installing the 2-4 brake snap ring.
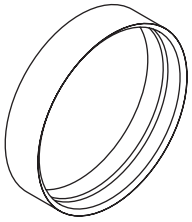 ST-498437000	498437000	HIGH CLUTCH PISTON GUIDE	Used for installing the high clutch piston.
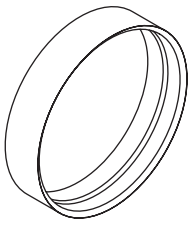 ST-498437100	498437100	LOW CLUTCH PISTON GUIDE	Used for installing the low clutch piston.

ILLUSTRATION	TOOL NUMBER	DESCRIPTION	REMARKS
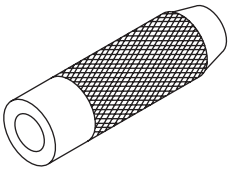 ST-899580100	899580100	INSTALLER	Used for press-fitting the ball bearing of the transfer clutch.
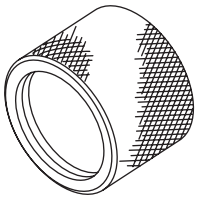 ST18675AA000	18675AA000	DIFFERENTIAL SIDE OIL SEAL INSTALLER	Used for installing the differential side retainer oil seal.
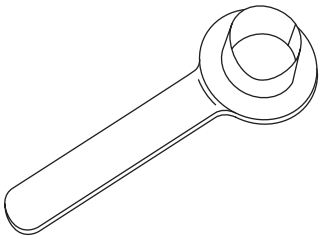 ST28399SA010	28399SA010	OIL SEAL PROTECTOR	Used for installing the front drive shaft.
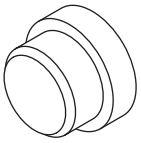 ST-398497701	398497701	INSTALLER	Used for installing the needle bearing.
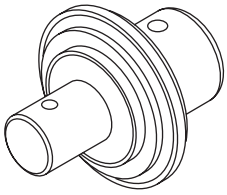 ST-499247300	499247300	INSTALLER	Used for installing drive pinion shaft oil seal.

ILLUSTRATION	TOOL NUMBER	DESCRIPTION	REMARKS
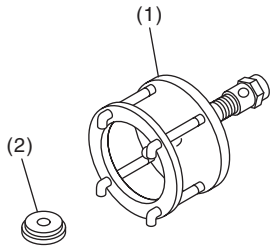 ST-899524100	899524100	PULLER SET	Use only the bolt. • Used together with the PULLER SET (499737100). • Used together with the PULLER (499737000). (1) Puller (2) Cap
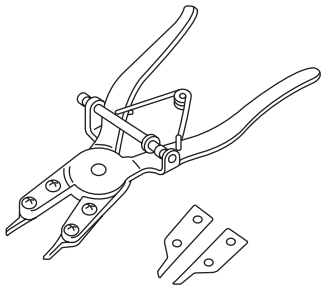 ST-398663600	398663600	PLIER	Used for removing and installing snap ring.
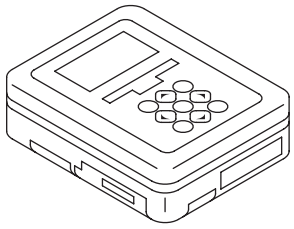 ST1B020XU0	1B020XU0	SUBARU SELECT MONITOR KIT	Used for troubleshooting the electrical system.

2. GENERAL TOOL

TOOL NAME	REMARKS
Depth gauge	Used for measuring the transmission end play.
Thickness gauge	Used for measuring clearance of the clutch, brake and oil pump.
Micrometer	Used for measuring thickness of the drive pinion.
Spring balance	Used for measuring the starting torque of the drive pinion.
Circuit tester	Used for measuring resistance and voltage.
TORX® T70	Used for installing and removing the differential gear oil drain plug.
Push/pull gauge	Used for measuring low, reverse and high clutch piston stroke.